UISP Console

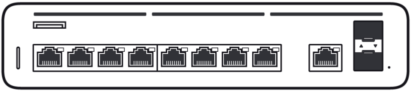

a

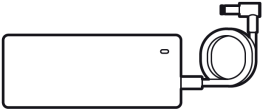

b

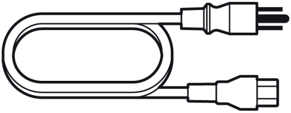

c

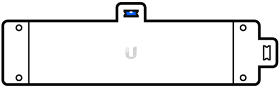

d

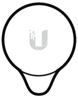

e

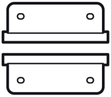

f

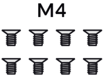

g

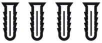

h

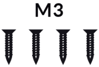

i

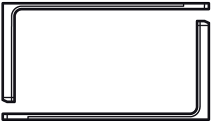

j

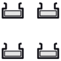

k

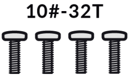

l

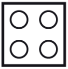

m

1

A

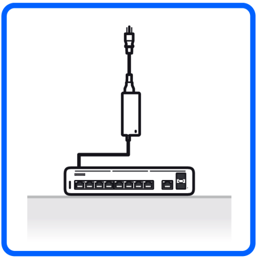

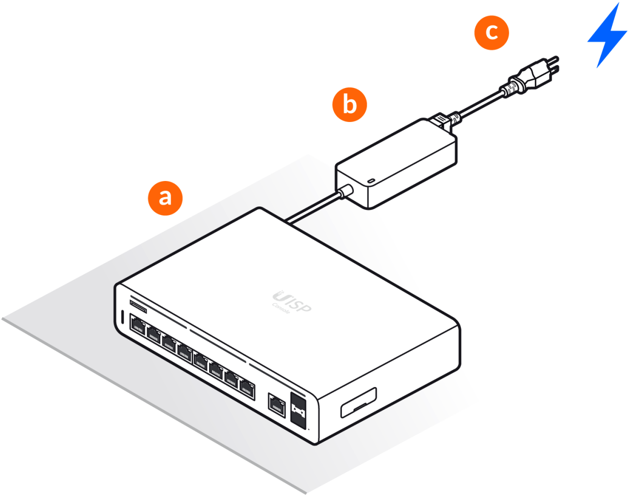
c
b
a
UISP
Console

B

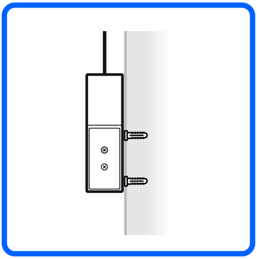

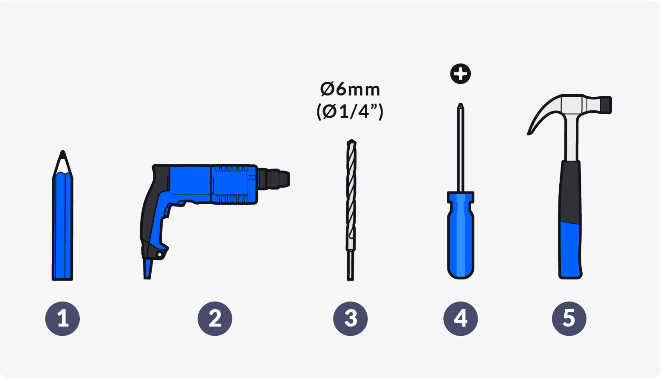
Ø6mm
(Ø1/4")
1
2
3
4
5

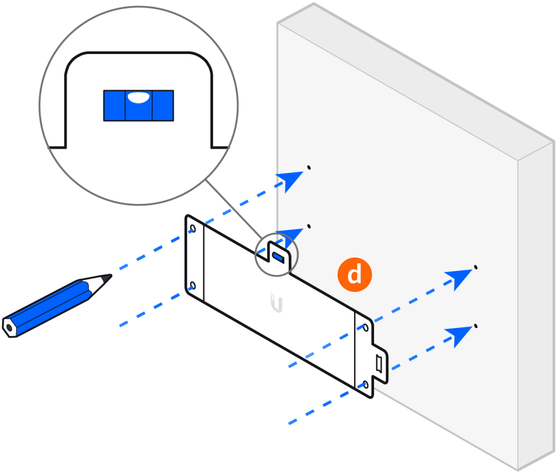

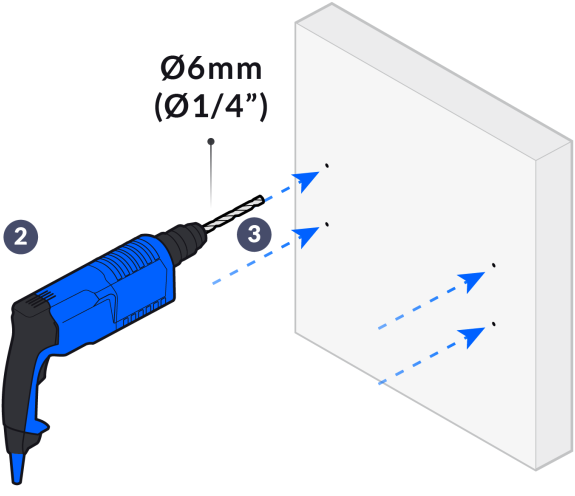

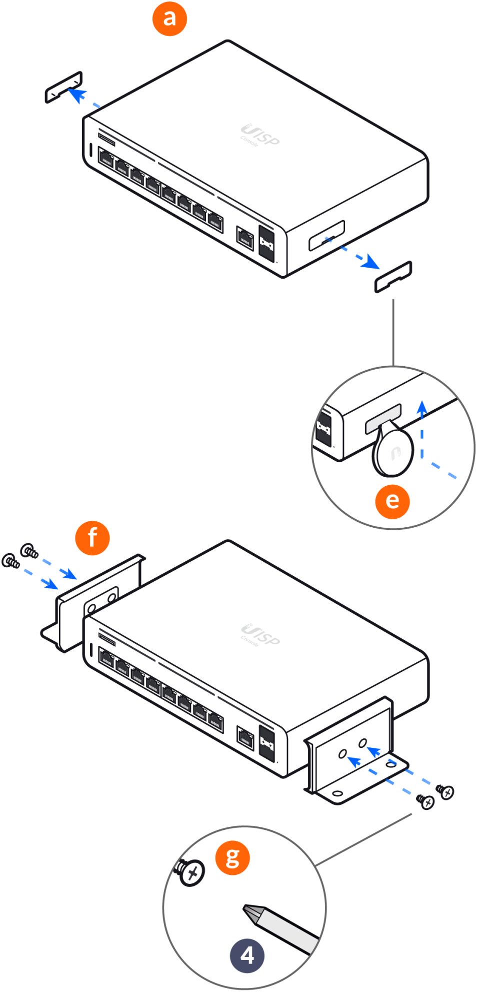
a
UISP
Console
e
f
UISP
Console
g
4

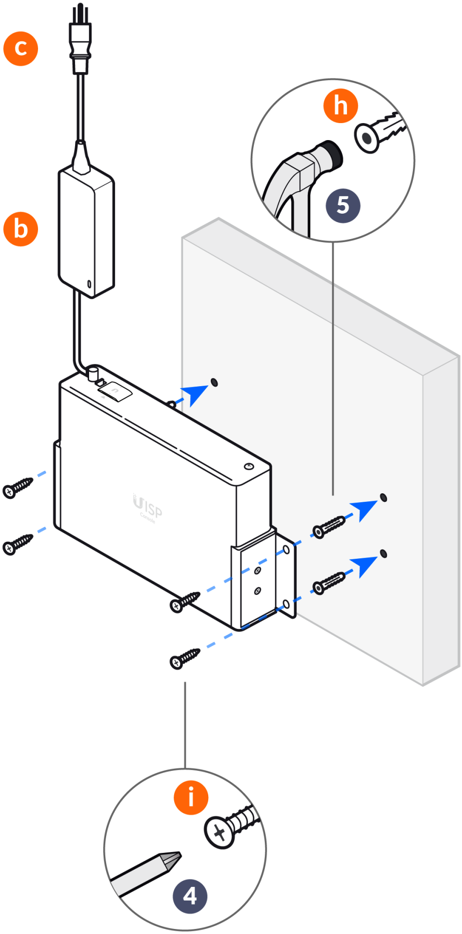
c
b
h
5
UISP
Console
i
4

C

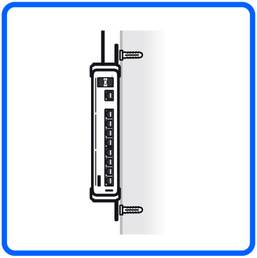

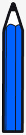

1

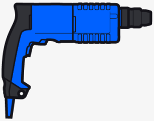

2

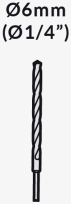

3

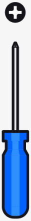

4

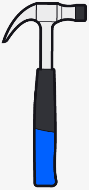

5

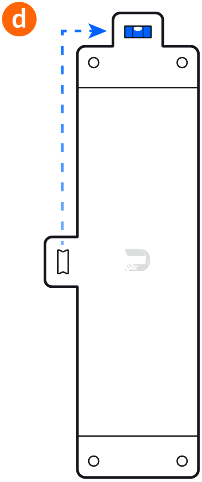

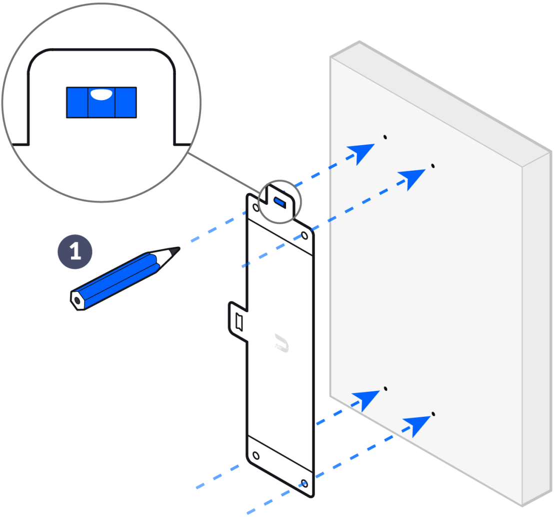

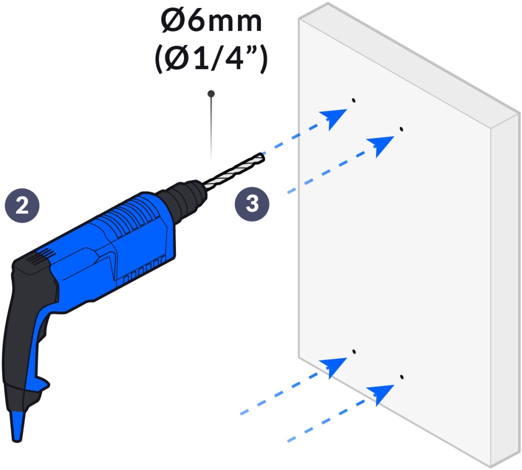

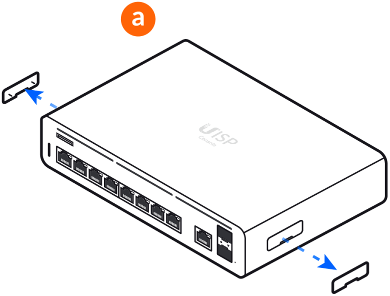
a
UISP
Console

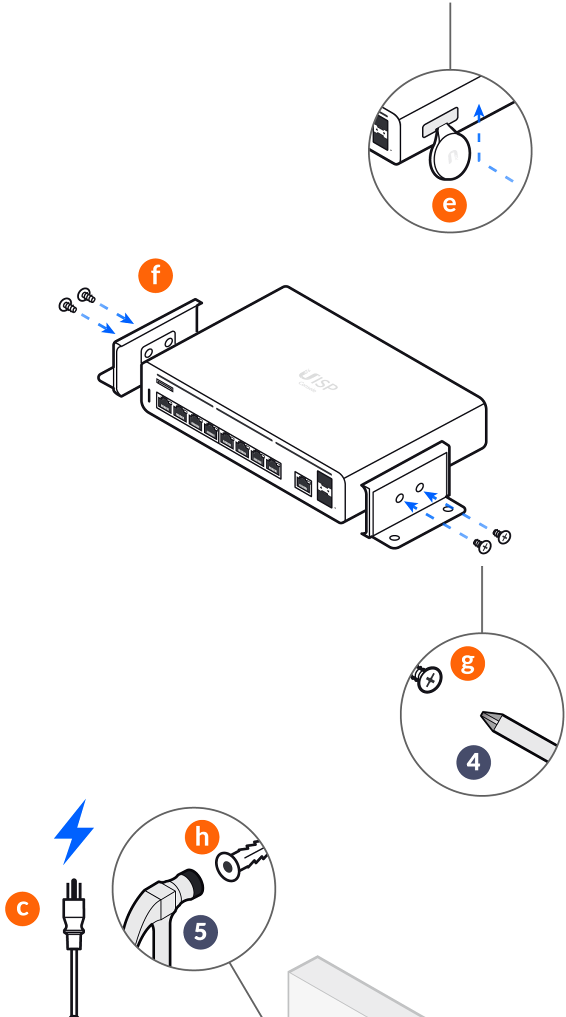
e
f
UISP
Console
g
4
c
h
5

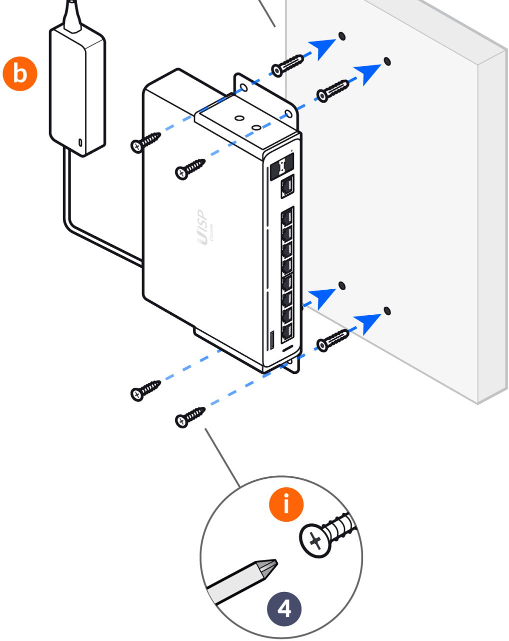
b
UISP Console
i
4

D

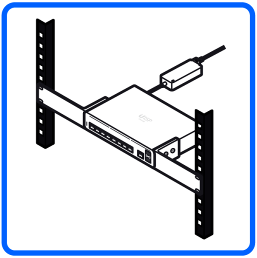

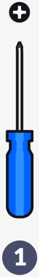

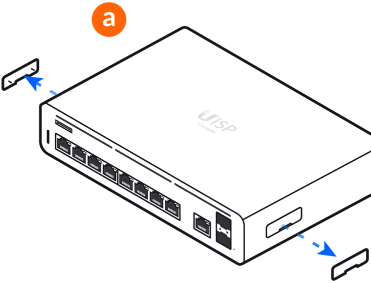
a
UISP
Console

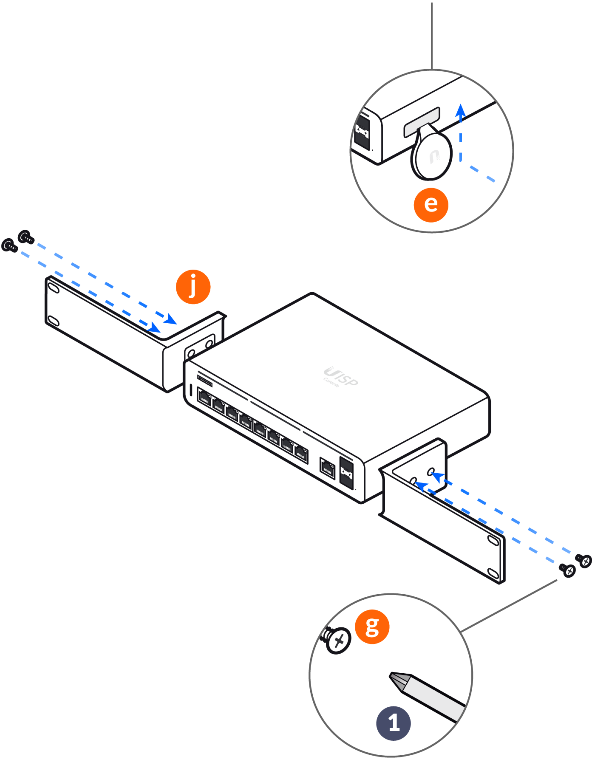
e
j
UISP
Console
g
1

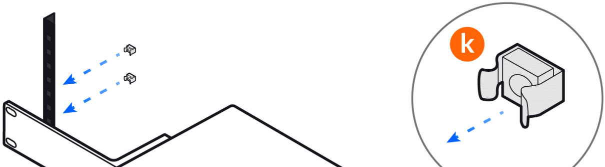

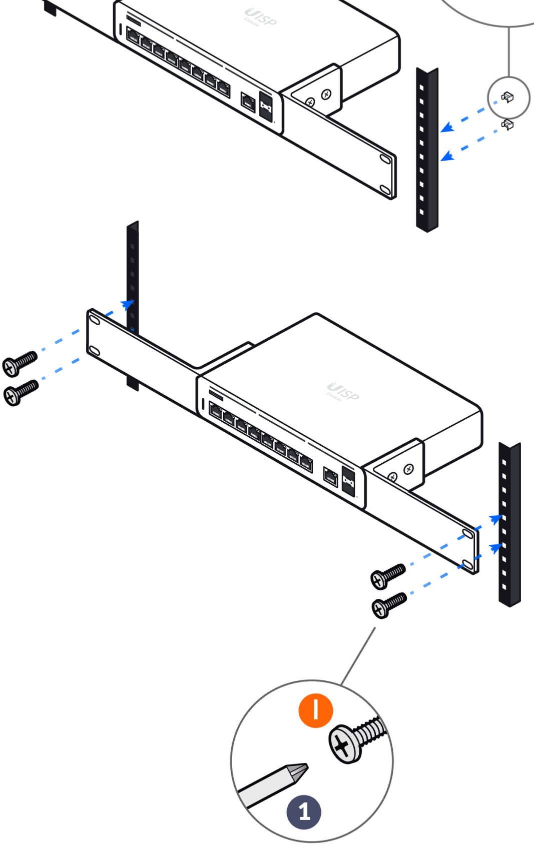

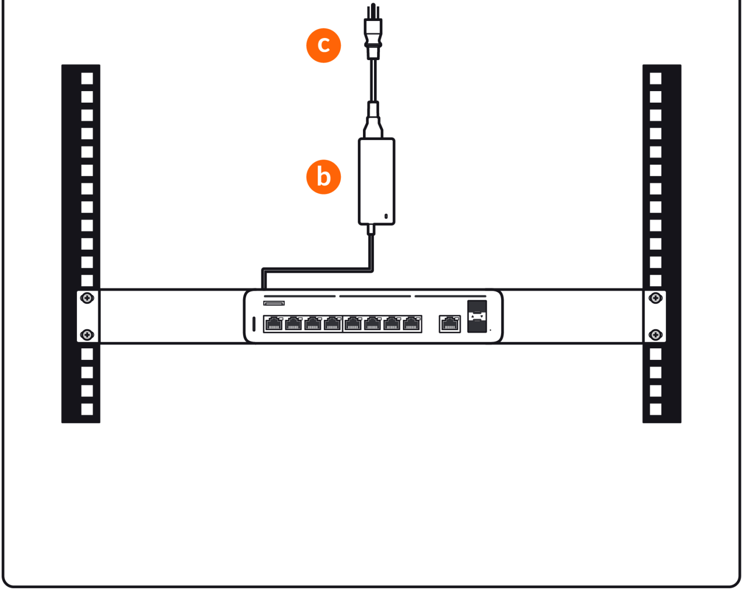

2

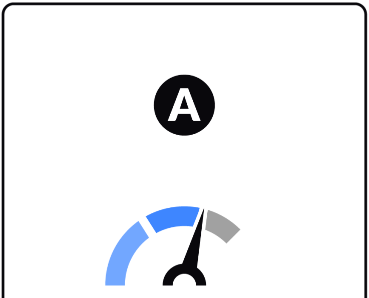

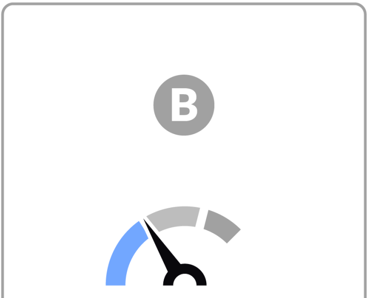

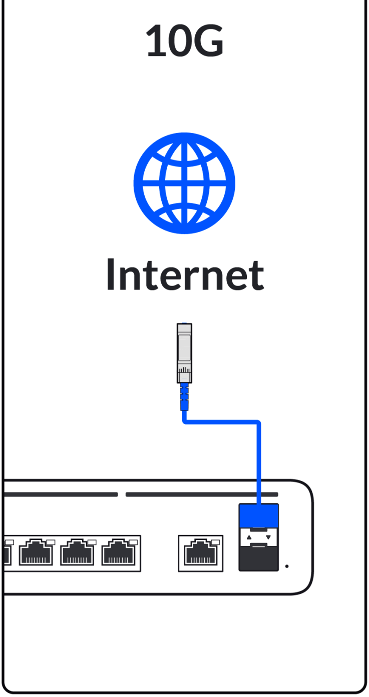
10G
Internet

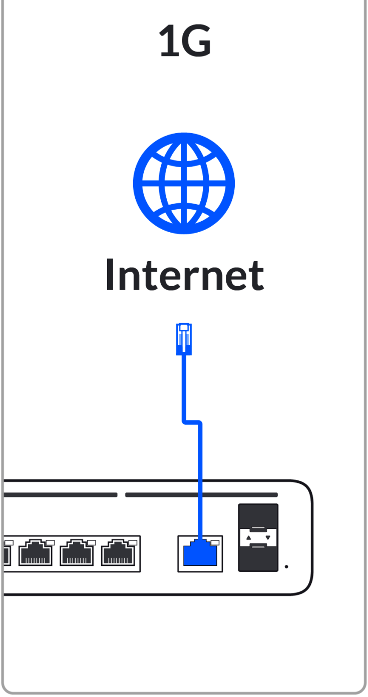
1G
Internet

3

Download on the App Store

GET IT ON Google Play

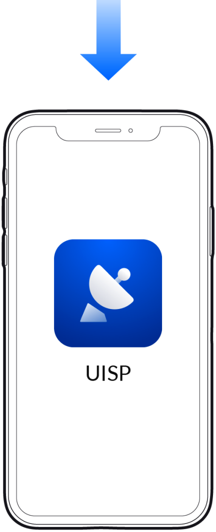

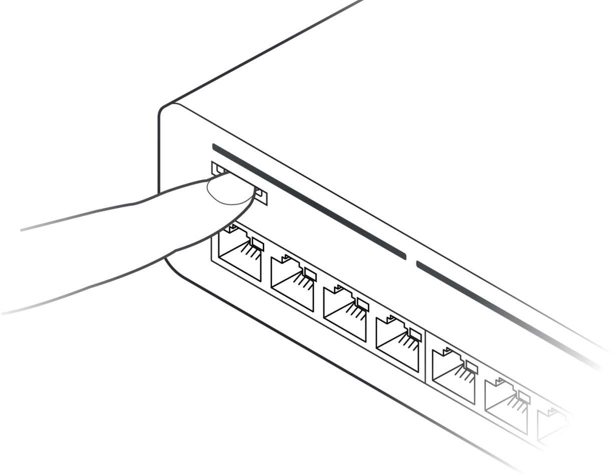

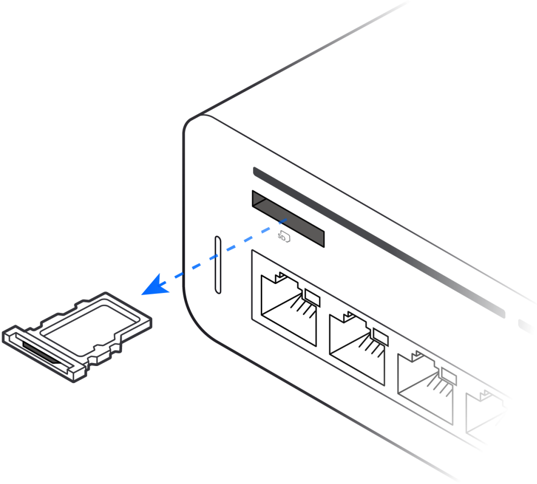

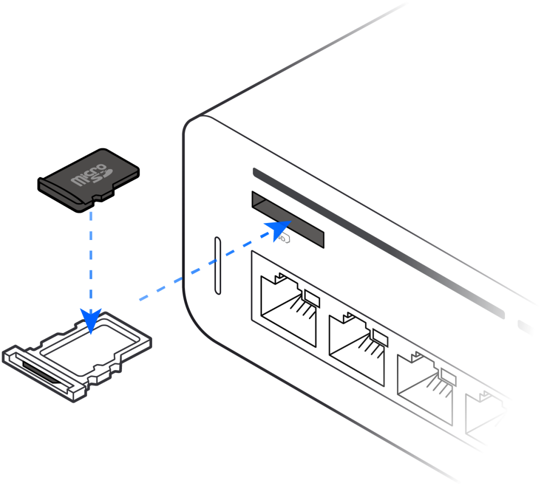

✓

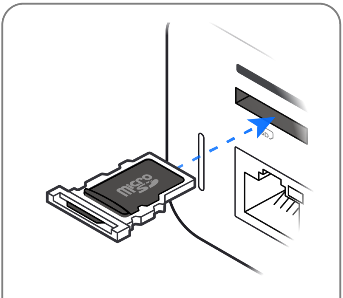

✗

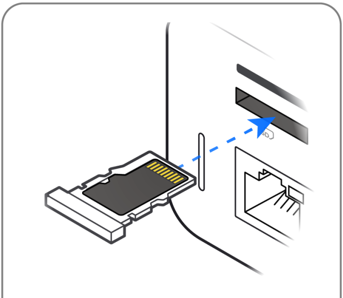

Get Answers

help.ui.com

UI Support

©2020-2021 Ubiquiti Inc. All rights reserved. Ubiquiti, Ubiquiti Networks, the Ubiquiti U logo, UISP, and Wave are trademarks or registered trademarks of Ubiquiti Inc. in the United States and in other countries. Apple, the Apple logo, and App Store are trademarks of Apple Inc., registered in the U.S. and other countries. Android, Google, Google Play, the Google Play logo, and other marks are trademarks of Google LLC. All other trademarks are the property of their respective owners.