UniFi 6 Long-Range

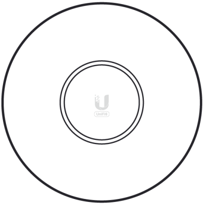
a

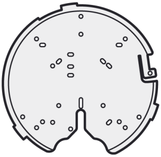
b

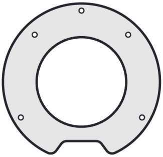
c

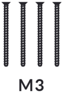

d

e

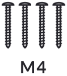

f

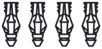
g

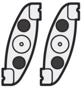
h

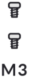

i

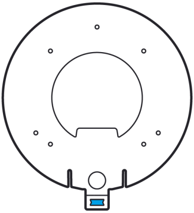

j k l m

1

A

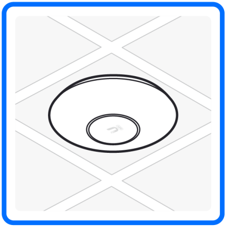

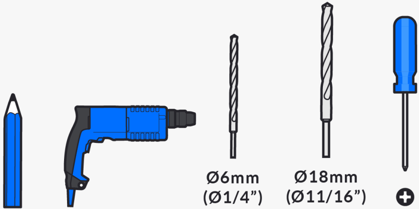
Ø6mm
(Ø1/4")
Ø18mm
(Ø11/16")

① ② ③ ④ ⑤

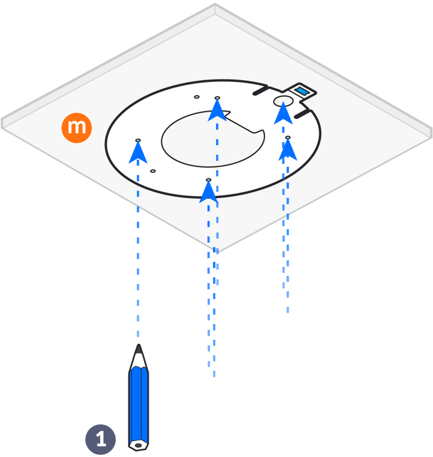

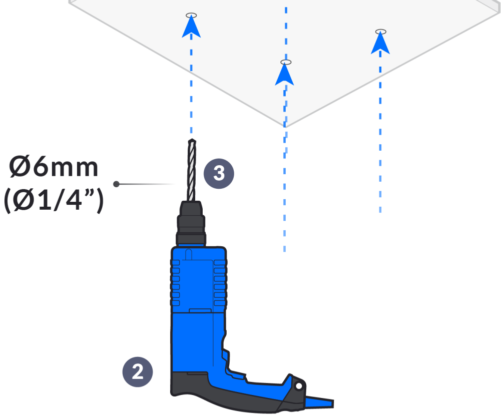

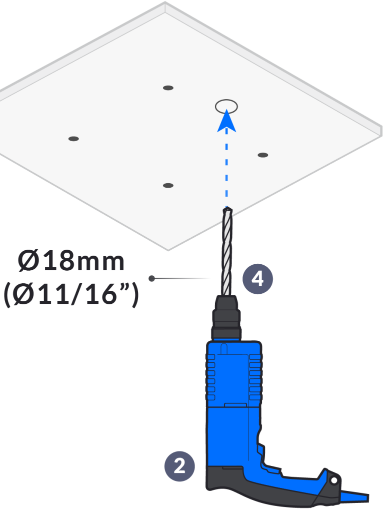
Ø18mm
(Ø11/16”)
4
2

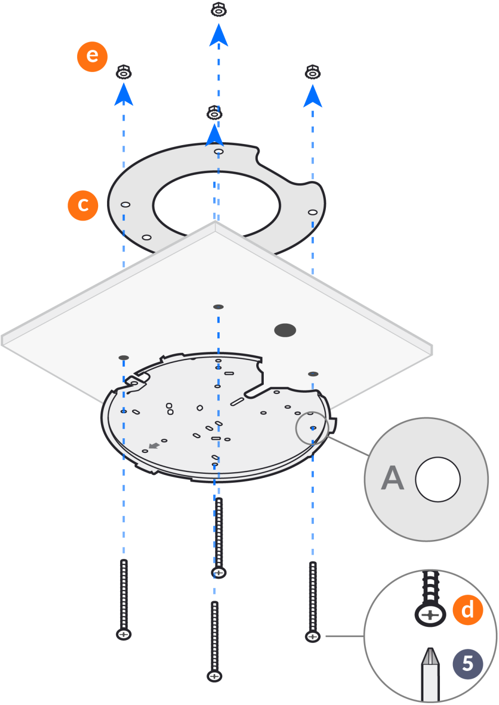

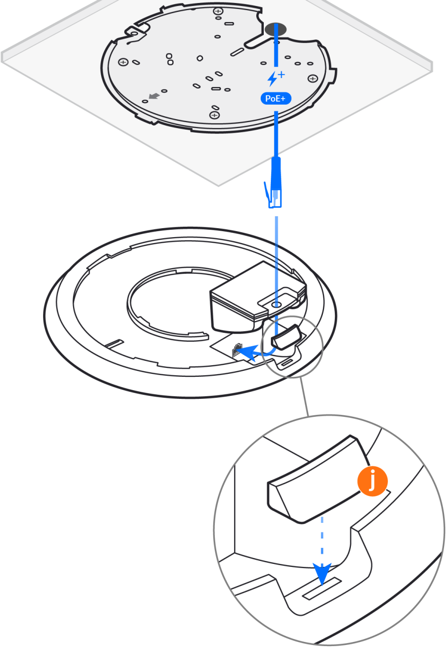

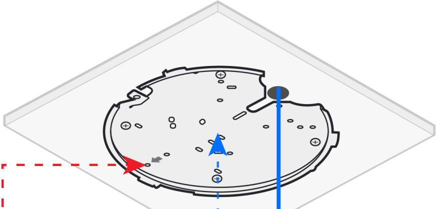

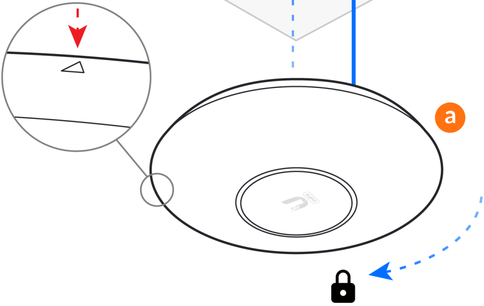

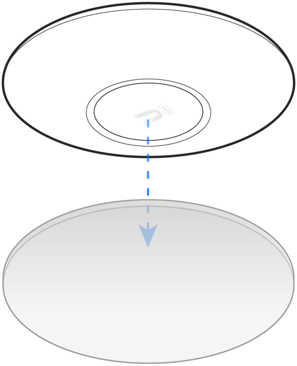

B

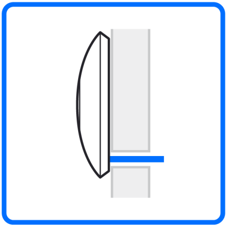

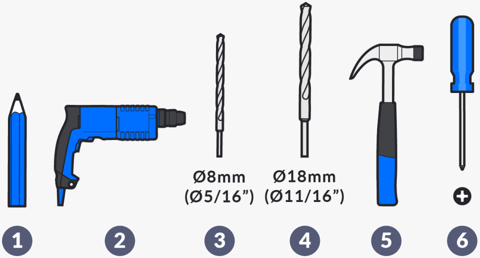
Ø8mm
(Ø5/16”)
Ø18mm
(Ø11/16”)
1
2
3
4
5
6

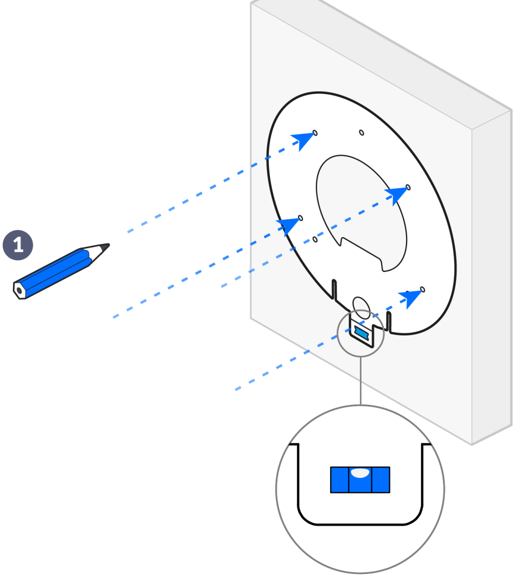

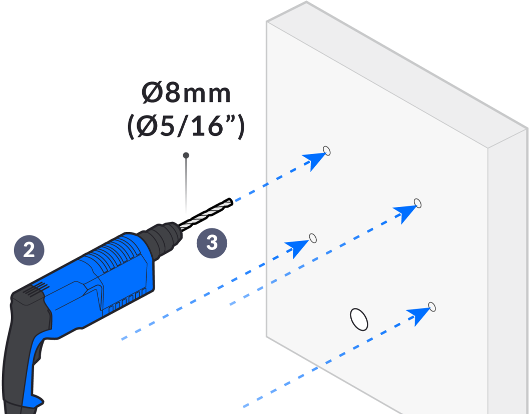
Ø8mm
(Ø5/16”)
2
3

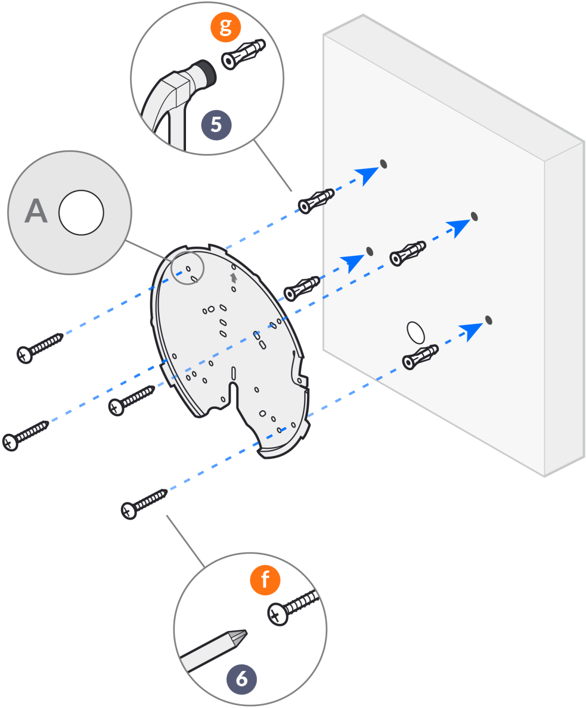

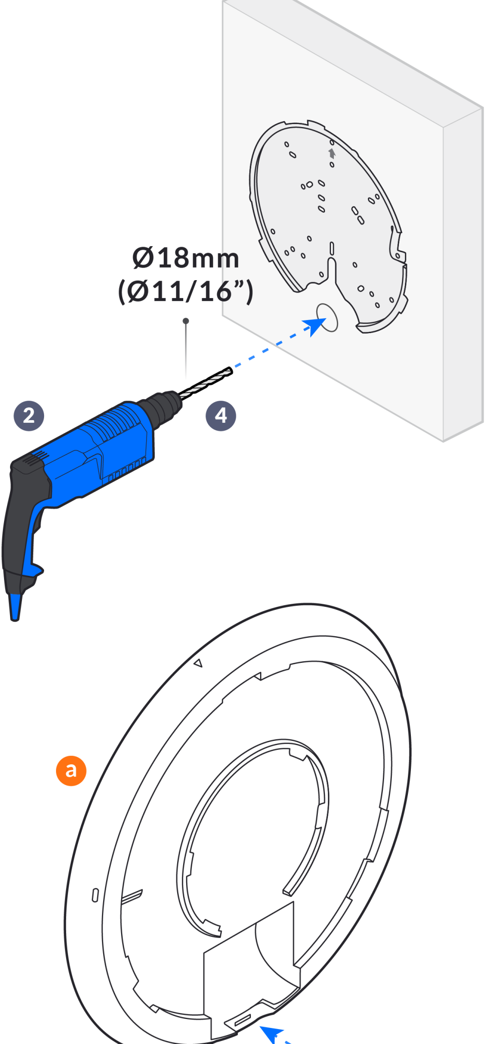
Ø18mm
(Ø11/16”)
2
4
a

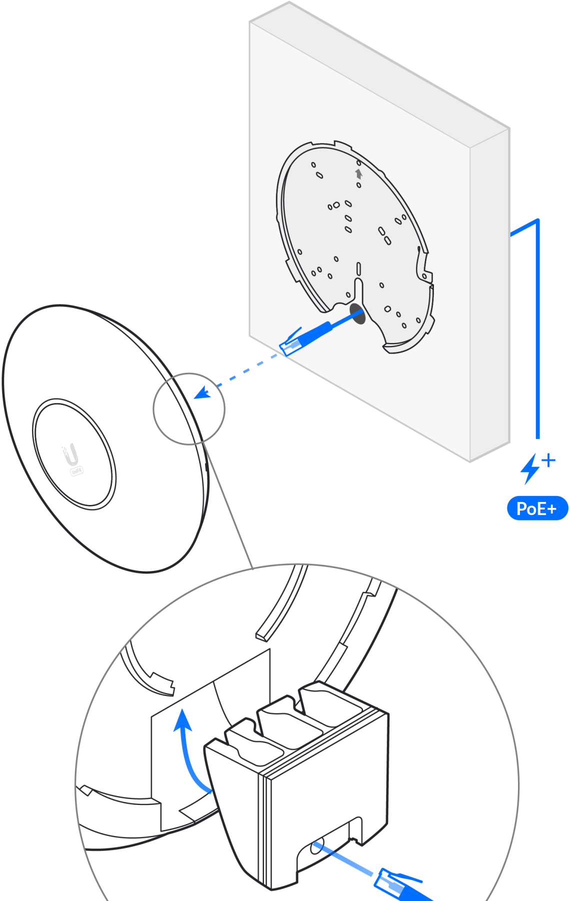

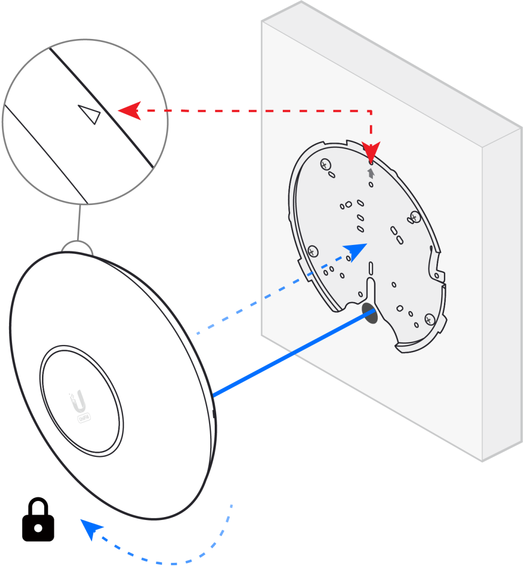

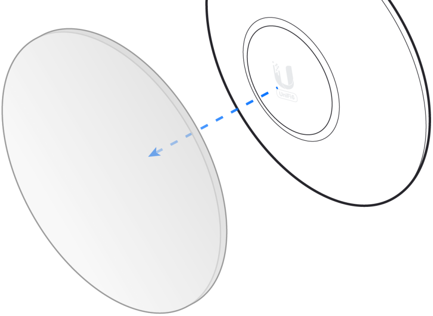

C

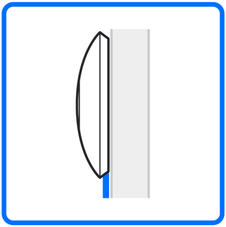

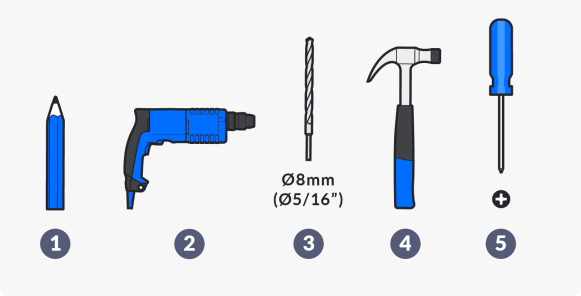
Ø8mm
(Ø5/16”)
1
2
3
4
5

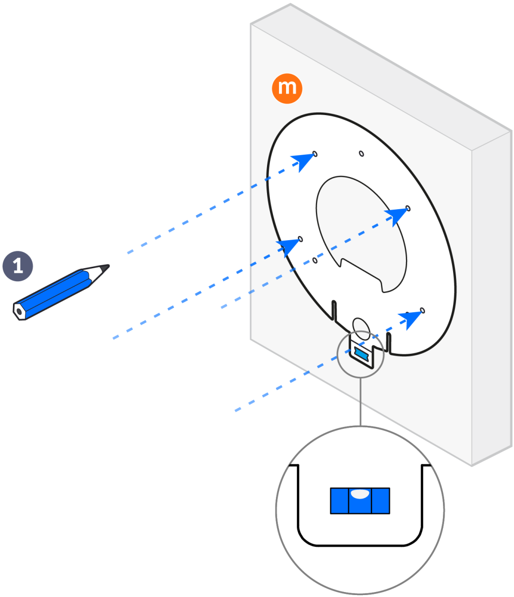

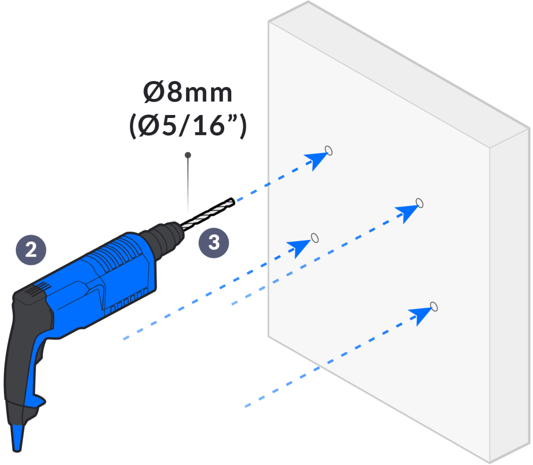
Ø8mm
(Ø5/16”)
2
3

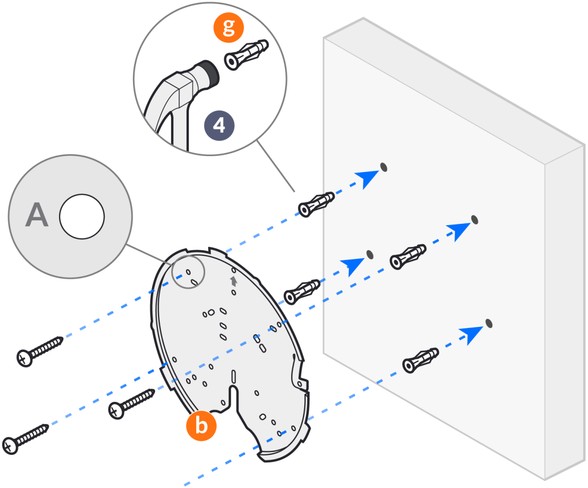

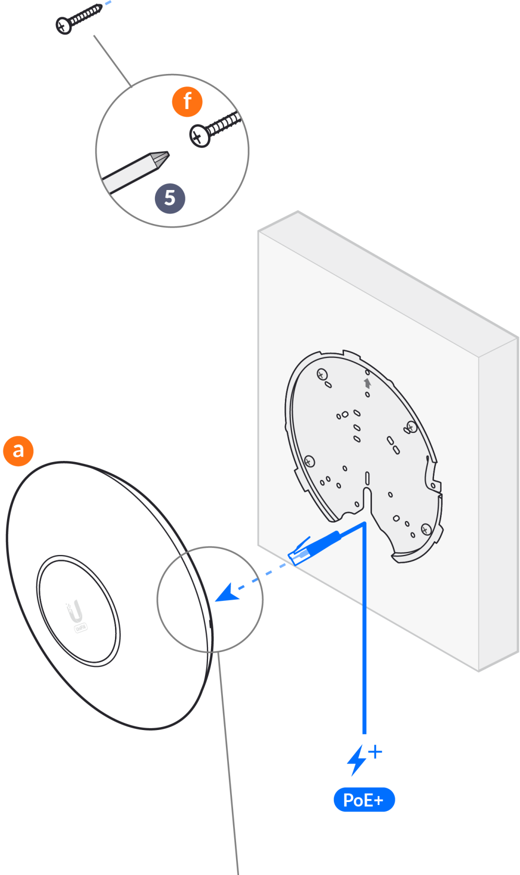

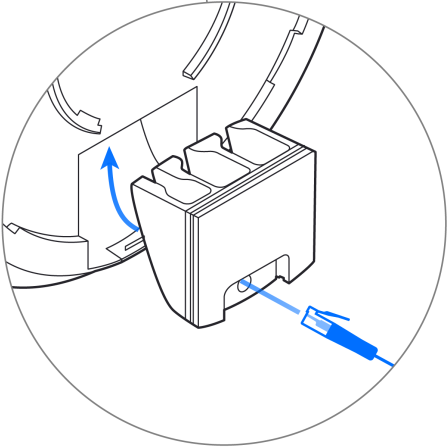

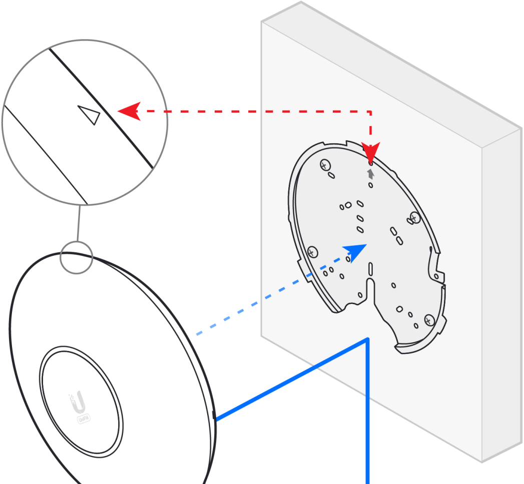

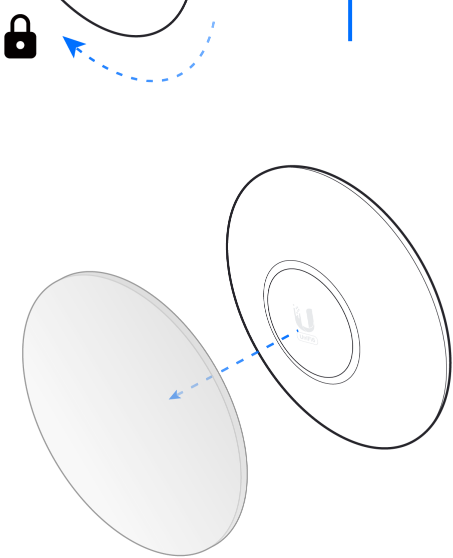

D

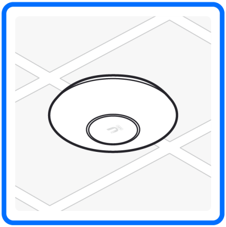

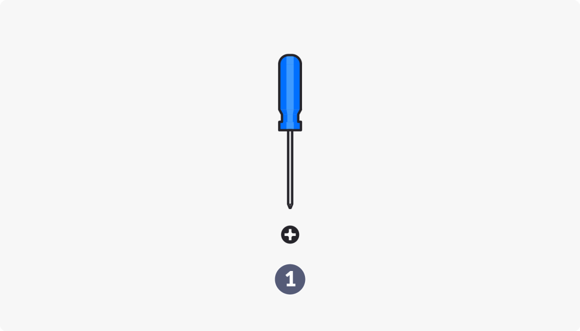

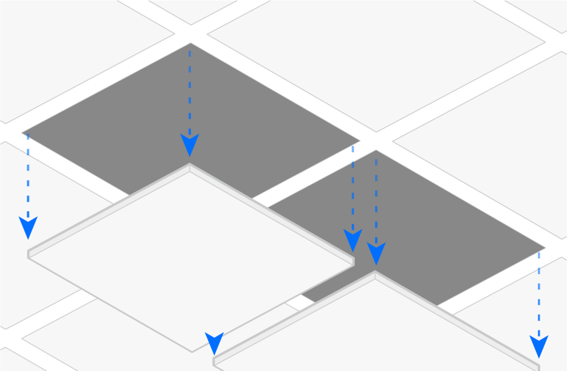

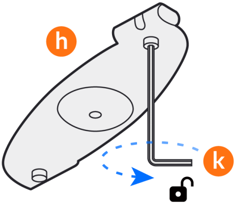

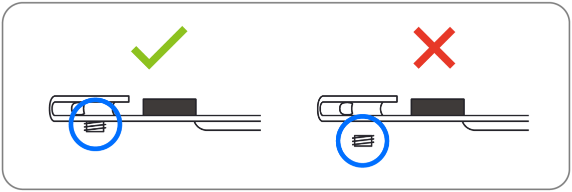

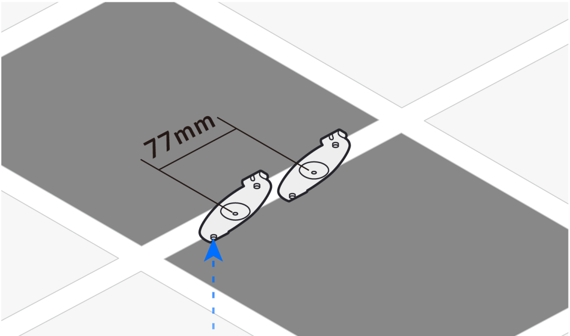

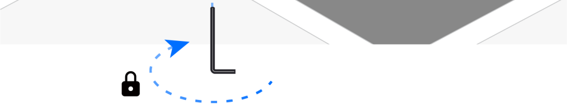

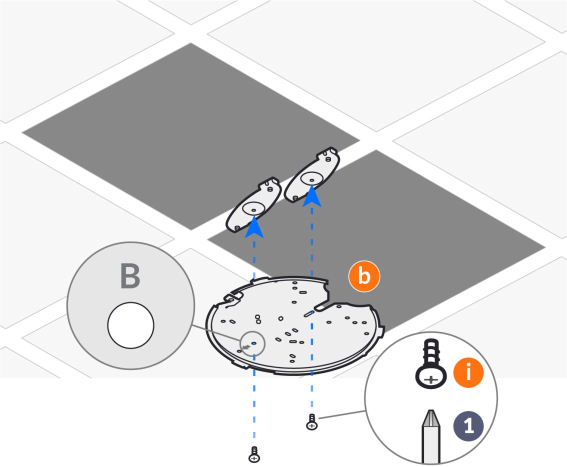

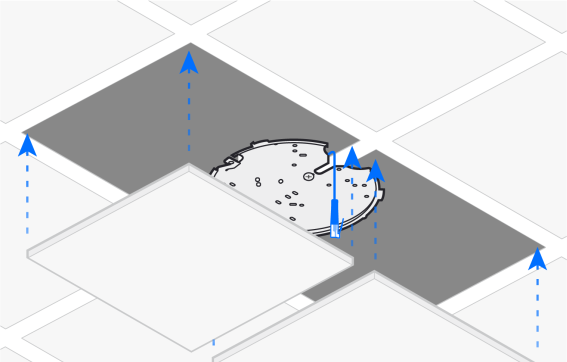

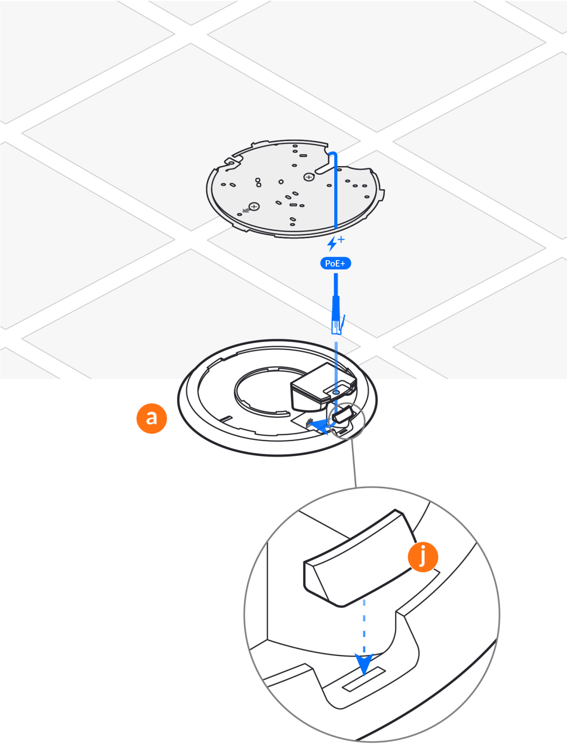

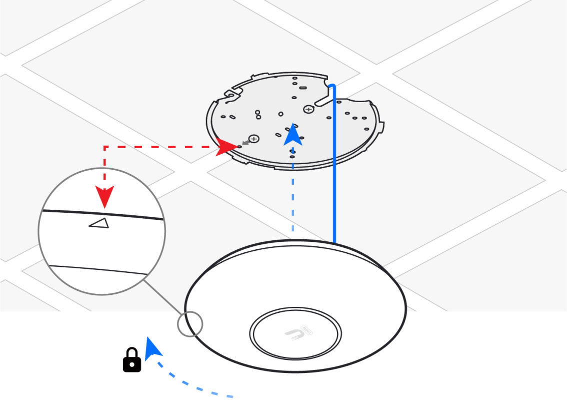

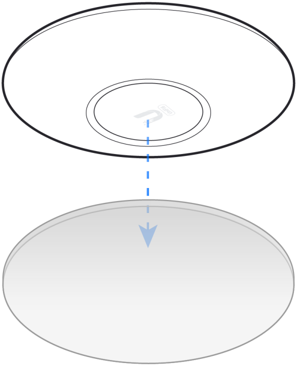

E

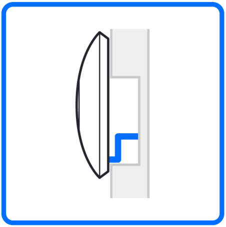

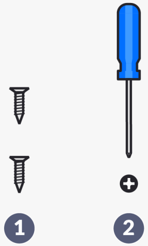

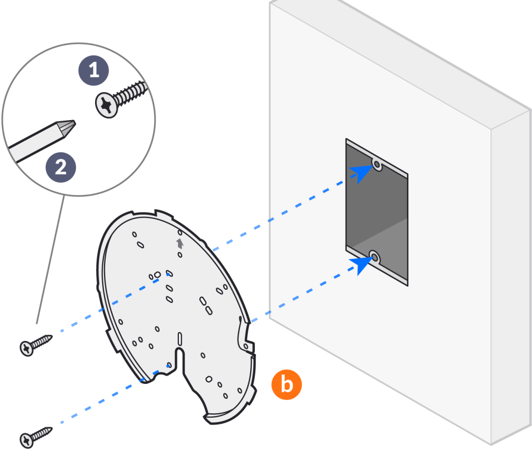

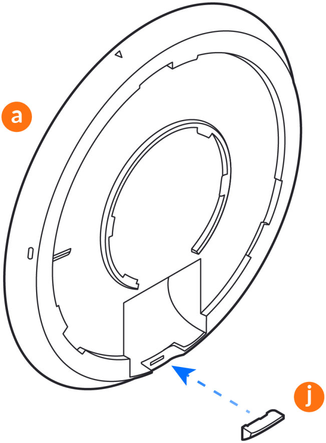

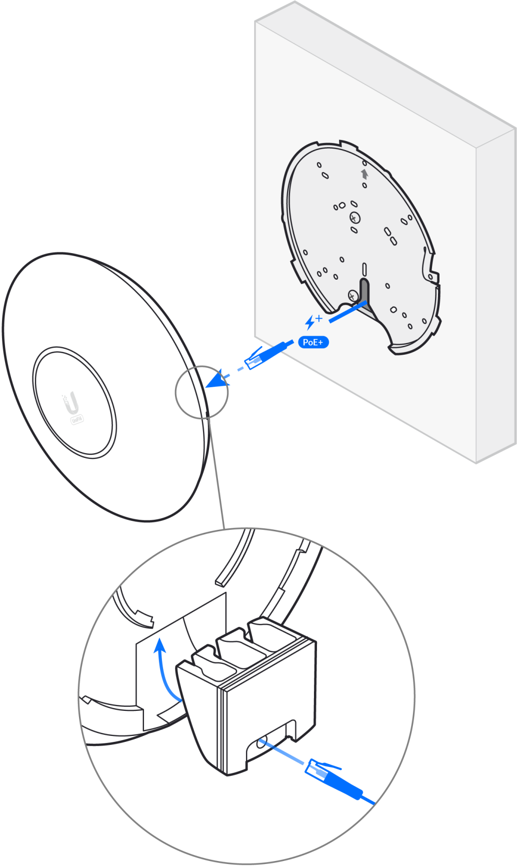

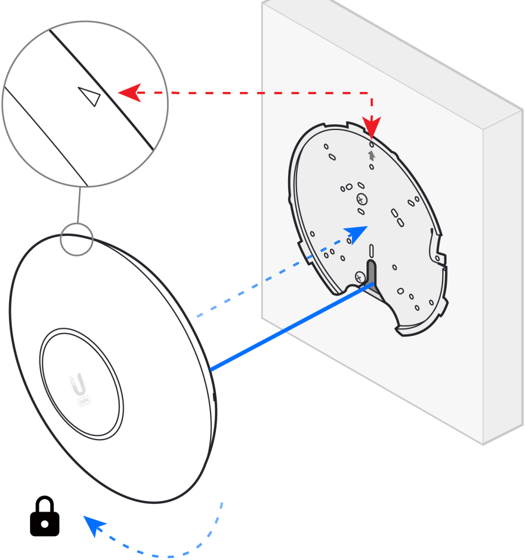

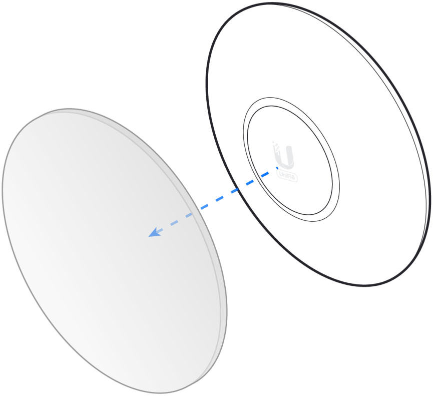

2

A

Internet

Gateway

B

Wi-Fi

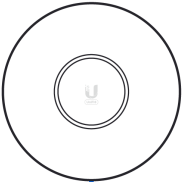

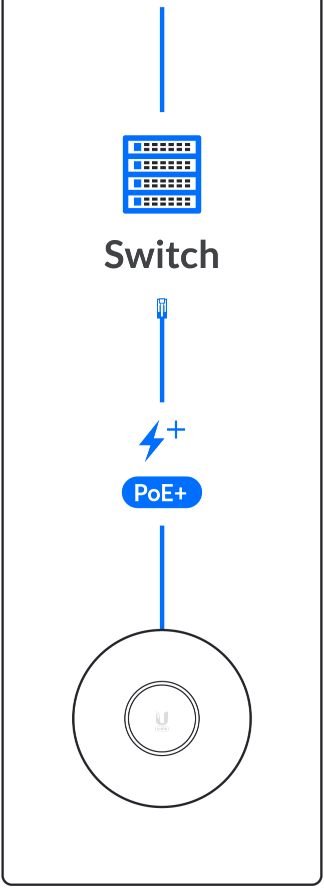

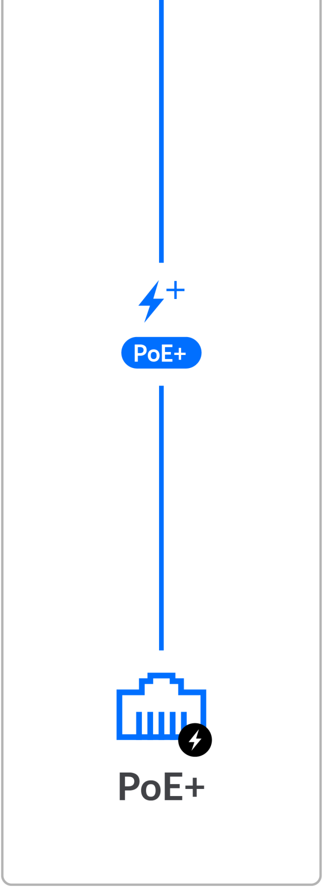

3

Download on the
App Store

GET IT ON
Google Play

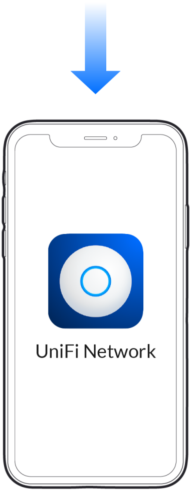
UniFi Network

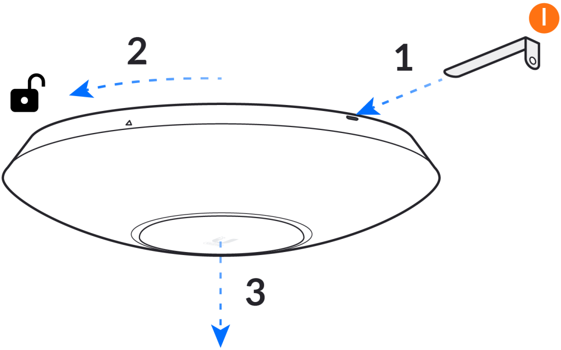

UniFi Network

Get Answers
help.ui.com

UI Support

©2021 Ubiquiti Inc. All rights reserved. Ubiquiti, Ubiquiti Networks, the Ubiquiti U logo, UniFi, and UniFi Network are trademarks or registered trademarks of Ubiquiti Inc. in the United States and in other countries. Apple and the Apple logo are trademarks of Apple Inc., registered in the U.S. and other countries. App Store and the Apple logo are trademarks of Apple Inc., registered in the U.S. and other countries. Android, Google, Google Play, the Google Play logo, and other marks are trademarks of Google LLC. All other trademarks are the property of their respective owners.